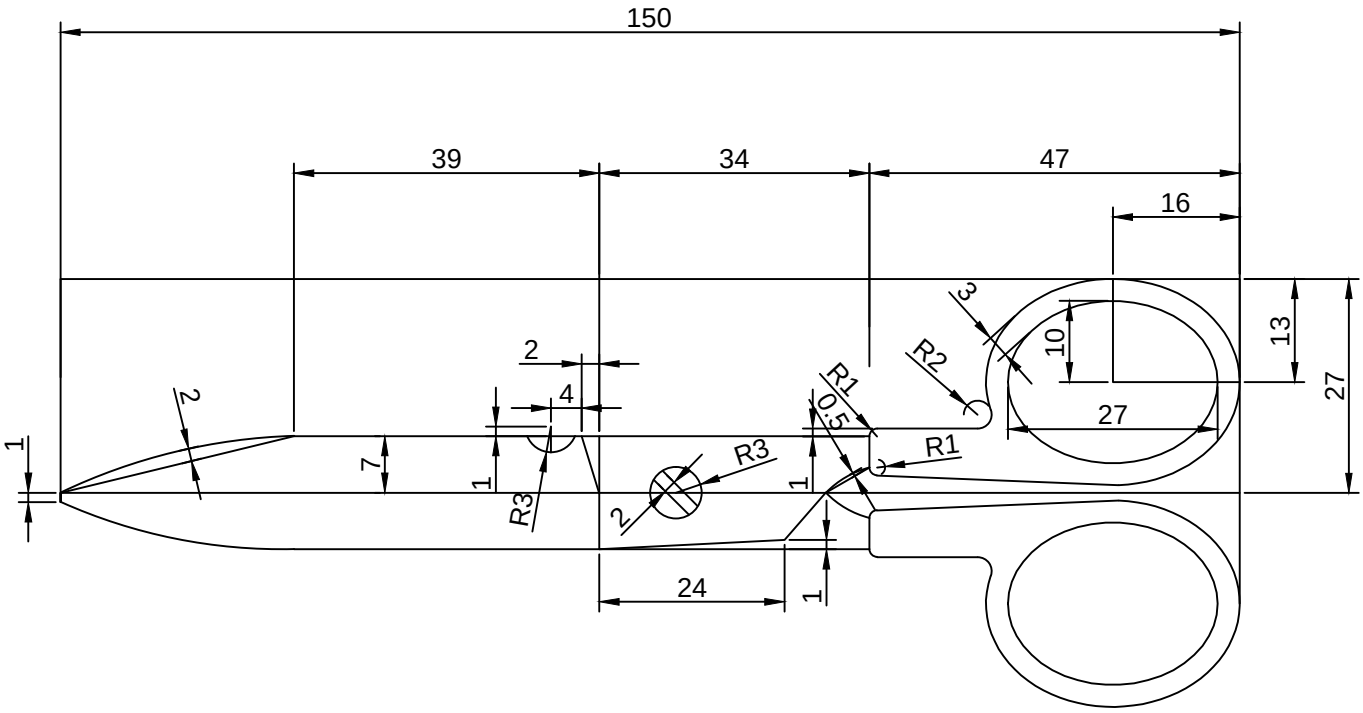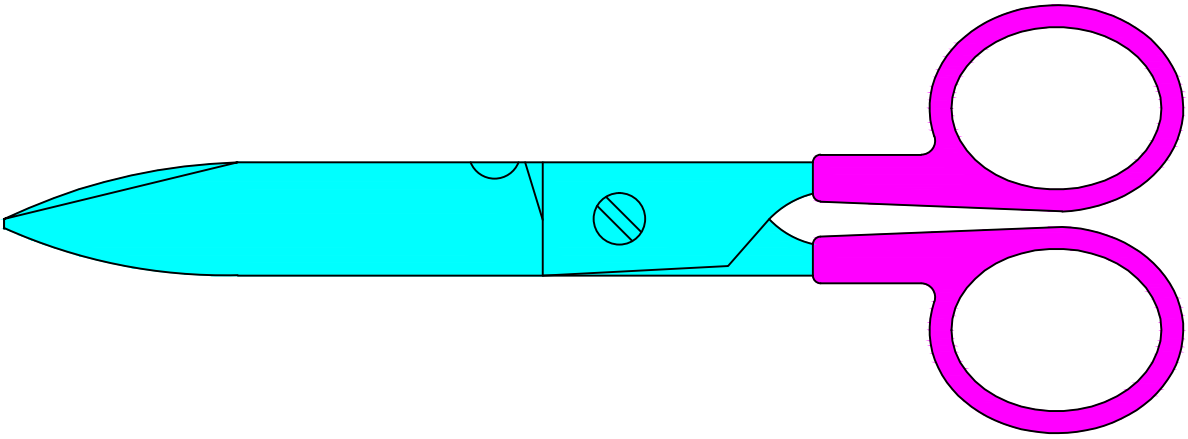
150
39
34
47
16
13
27
10
3
R2
R1
0.5
R1
27
2
4
R3
R3
2
7
1
1
2
1
1
24